XTIVOR

ENGLISH EDITION

# Joint Modules & Robotic Arms

## Product Selection Manual

15 joint modules. 3 robotic-arm platforms.

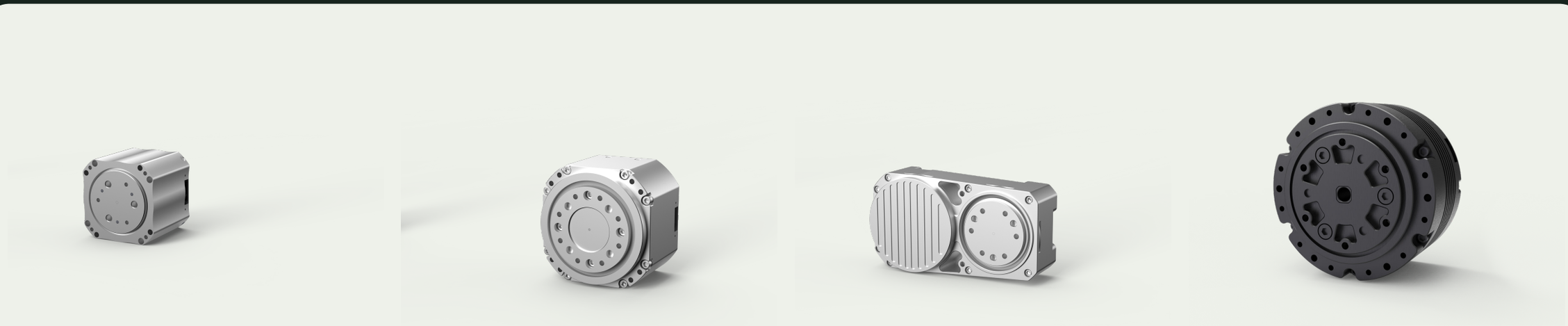

Technical revision 2026.11.13

XTIVOR edition 2026.11.25

**xtivor-robot.com**

jennie@xtivor-robot.com

# Robotics hardware for embodied AI

XTIVOR Robotics offers humanoid robots, robotic arms and servo joint modules for research teams, developers and system integrators working on embodied AI and motion systems.

## Choose by task, then verify the operating envelope.

| Product family | Selection considerations | Products in this edition |
| --- | --- | --- |
| Planetary modules | Compare continuous torque, speed, current and bearing configuration. | XTR-J102 - J110 |
| Ultra-thin modules | Check available installation space, mounting pattern and cable routing. | XTR-J111 / J112 |
| Hollow-bore modules | Check bore and mounting geometry, voltage and operating torque. | XTR-J113 / J114 / J115 / J116 |
| Robotic arms | Define reach, payload conditions, motion range and controller configuration. | XTR-A600 / A610 / A800 |

This edition covers the joint modules and arms in the latest technical revision. The wider XTIVOR portfolio is available on the website. Product-specific integration must be confirmed before ordering.

# Joint module selector

Rated torque is not stall torque. Use the product pages and engineering notes to confirm operating limits.

| Product code | Rated torque<br>N·m | Stall torque<br>N·m | Rated speed<br>rpm | Rated voltage<br>V | Weight<br>g | Details |
|---|---|---|---|---|---|---|
| XTR-J102 | 2 | 13 | 40 | 24 | 237 | 4 |
| XTR-J103 | 2 | 13 | 40 | 24 | 237 | 5 |
| XTR-J104 | 3.5 | 13 | 82 | 24 | 322 | 6 |
| XTR-J105 | 6 | 28 | 50 | 24 | 323 | 7 |
| XTR-J106 | 6 | 28 | 50 | 24 | 345 | 8 |
| XTR-J107 | 10 | 48 | 60 | 24 | 565 | 9 |
| XTR-J108 | 10 | 48 | 60 | 24 | 570 | 10 |
| XTR-J109 | 3.5 | 15 | 250 | 24 | 390 | 11 |
| XTR-J110 | 20 | 76 | 45 | 24 | 850 | 12 |
| XTR-J111 | 10 | 36 | 50 | 24 | 558 | 13 |
| XTR-J112 | 20 | 50 | 40 | 24 | 808 | 14 |
| XTR-J114 | 2 | 10 | 40 | 24 | 237 | 15 |
| XTR-J113 | 4 | 16 | 50 | 24 | 385 | 16 |
| XTR-J115 | 30 | 100 | 161 | 48 | 1380 | 17 |
| XTR-J116 | 45 | 190 | 45 | 48 | 1850 | 18 |

Pricing and availability are quoted by configuration and quantity. Engineering graphics retain their original scale and annotations; do not scale dimensions from the page.

# XTR-J102

Planetary joint module

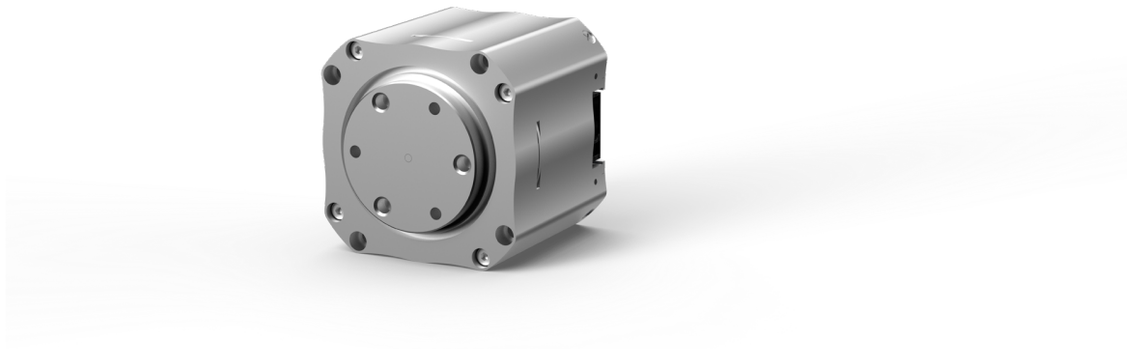

| Mechanical | |
|---|---|
| Length / width | 44 mm |
| Height | 43.4 mm |
| Weight | 237 g |
| **Module performance** | |
| Reduction ratio | 30:1 |
| Rated voltage | 24 V |
| Rated current | 0.65 A |
| Rated torque | 2 N·m |
| Stall torque | 13 N·m |
| Rated speed | 40 rpm |
| No-load speed | 155 rpm |
| Rated output power | 8.5 W |
| **Electrical & control** | |
| Voltage range | 12-60 V |
| Peak current | 12 A |
| Speed control accuracy | ±5% |
| Torque control accuracy | ±5% |
| Communication | CAN FD / CAN |
| Response time | 45 μs |
| Input encoder resolution | 14 bit |
| Output encoder resolution | 14 bit |
| Bus bit rate | 5 Mbps |
| Control frequency | 5 kHz |
| **Motor** | |
| Torque constant | 0.272 N·m/A |
| Pole pairs | 14 |
| **Gearbox** | |
| Backlash | <10 arcmin |
| Positioning repeatability | <12 arcmin |
| Absolute positioning accuracy | <15 arcmin |

Exact configuration and volume pricing on request.

## Torque-speed performance curve

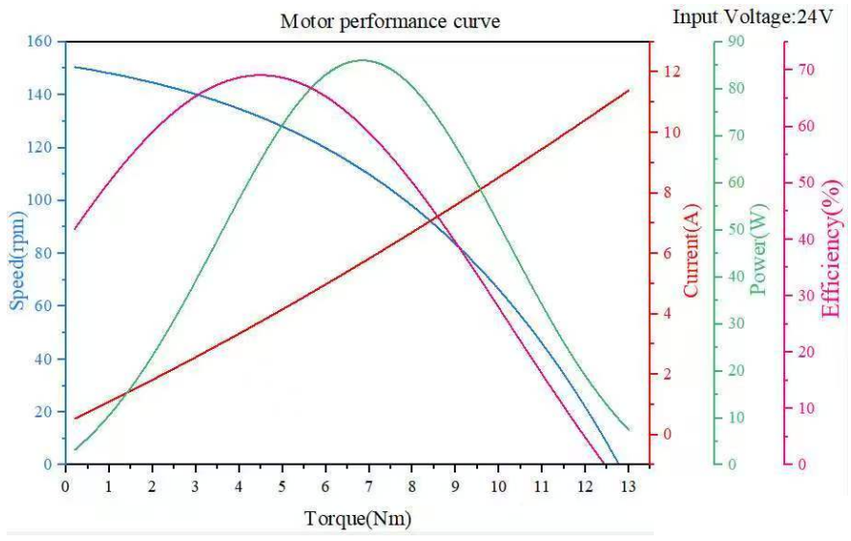


## Installation dimensions

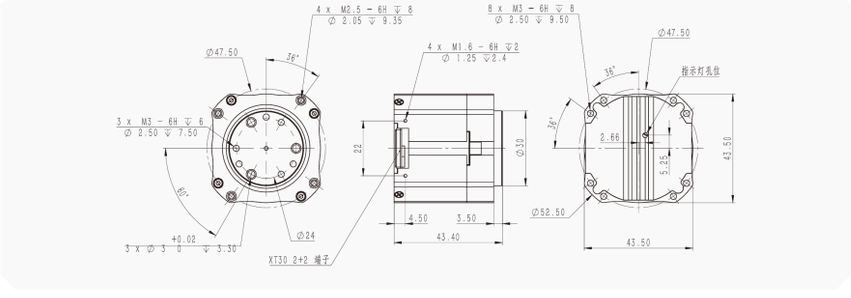

Original engineering graphic. Translated callouts: p. 22.

# XTR-J103

Planetary joint module / Crossed-roller bearing version

| | |
|---|---|
| **Mechanical** | |
| Length / width | 44 mm |
| Height | 44.9 mm |
| Weight | 237 g |
| **Module performance** | |
| Reduction ratio | 30:1 |
| Rated voltage | 24 V |
| Rated current | 0.65 A |
| Rated torque | 2 N·m |
| Stall torque | 13 N·m |
| Rated speed | 40 rpm |
| No-load speed | 155 rpm |
| Rated output power | 8.5 W |
| **Electrical & control** | |
| Voltage range | 12-60 V |
| Peak current | 12 A |
| Speed control accuracy | ±5% |
| Torque control accuracy | ±5% |
| Communication | CAN FD / CAN |
| Response time | 45 μs |
| Input encoder resolution | 14 bit |
| Output encoder resolution | 14 bit |
| Bus bit rate | 5 Mbps |
| Control frequency | 5 kHz |
| **Motor** | |
| Torque constant | 0.272 N·m/A |
| Pole pairs | 14 |
| **Gearbox** | |
| Backlash | <10 arcmin |
| Positioning repeatability | <12 arcmin |
| Absolute positioning accuracy | <15 arcmin |

Exact configuration and volume pricing on request.

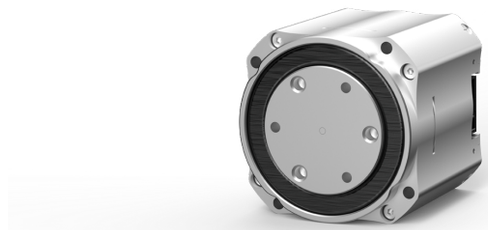

## Torque-speed performance curve

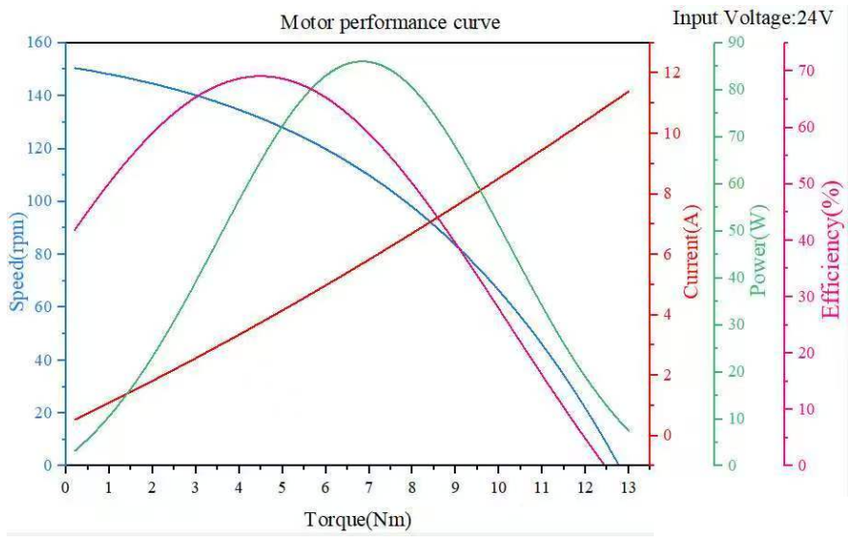


## Installation dimensions

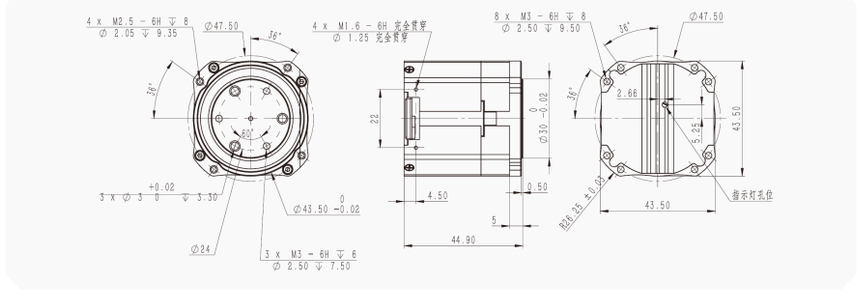

Original engineering graphic. Translated callouts: p. 22.

# XTR-J104

Planetary joint module

| Mechanical | |
|---|---|
| Length / width | 50 mm |
| Height | 47.4 mm |
| Weight | 322 g |

| Module performance | |
|---|---|
| Reduction ratio | 22:1 |
| Rated voltage | 24 V |
| Rated current | 2 A |
| Rated torque | 3.5 N·m |
| Stall torque | 13 N·m |
| Rated speed | 82 rpm |
| No-load speed | 123 rpm |
| Rated output power | 30 W |

| Electrical & control | |
|---|---|
| Voltage range | 12-60 V |
| Peak current | 10 A |
| Speed control accuracy | ±5% |
| Torque control accuracy | ±5% |
| Communication | CAN FD / CAN |
| Response time | 45 μs |
| Input encoder resolution | 14 bit |
| Output encoder resolution | 14 bit |
| Bus bit rate | 5 Mbps |
| Control frequency | 5 kHz |

| Motor | |
|---|---|
| Torque constant | 0.54 N·m/A |
| Pole pairs | 14 |

| Gearbox | |
|---|---|
| Backlash | <10 arcmin |
| Positioning repeatability | <12 arcmin |
| Absolute positioning accuracy | <15 arcmin |

Exact configuration and volume pricing on request.

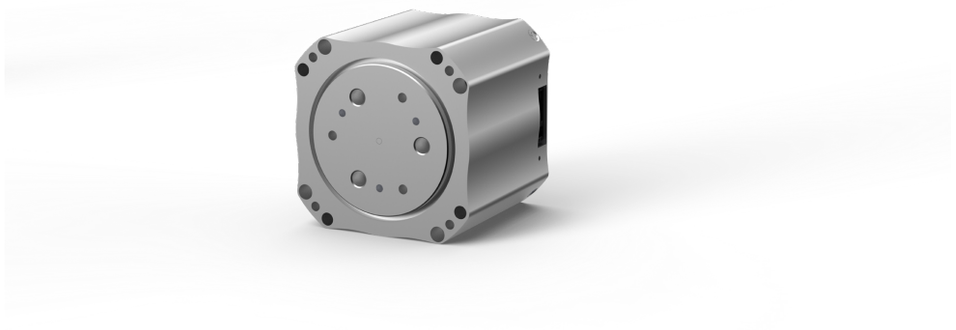

## Torque-speed performance curve

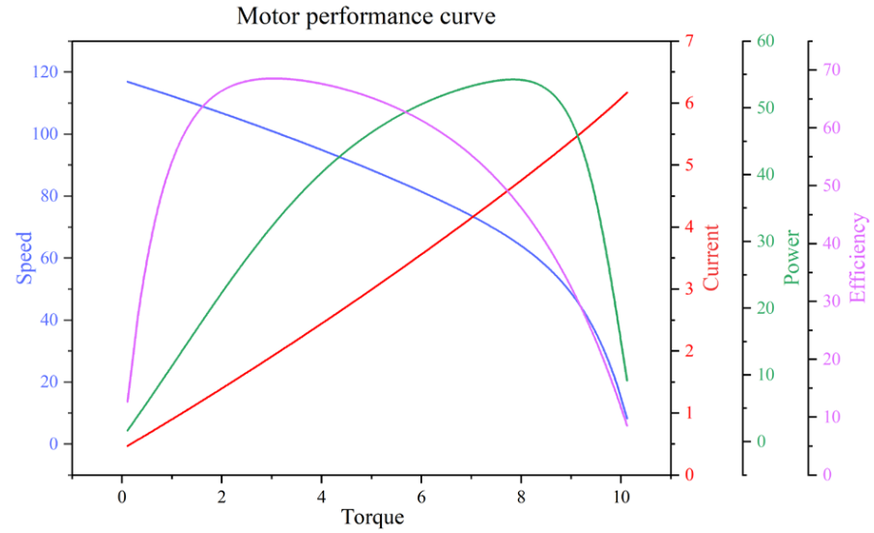


## Installation dimensions

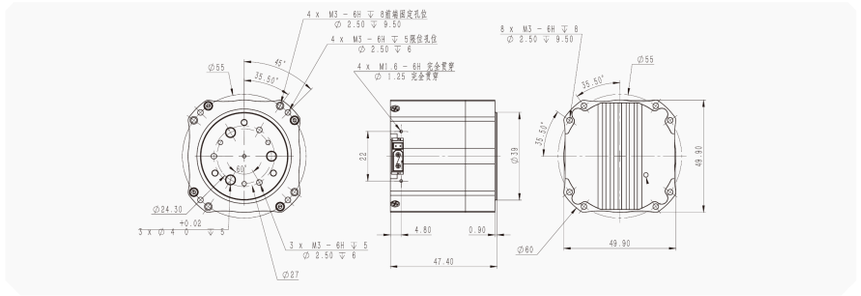

Original engineering graphic. Translated callouts: p. 22.

# XTR-J105

Planetary joint module

| Mechanical | |
|---|---|
| Length / width | 50 mm |
| Height | 47.4 mm |
| Weight | 323 g |
| **Module performance** | |
| Reduction ratio | 36:1 |
| Rated voltage | 24 V |
| Rated current | 2 A |
| Rated torque | 6 N·m |
| Stall torque | 28 N·m |
| Rated speed | 50 rpm |
| No-load speed | 80 rpm |
| Rated output power | 30 W |
| **Electrical & control** | |
| Voltage range | 12-60 V |
| Peak current | 13.3 A |
| Speed control accuracy | ±5% |
| Torque control accuracy | ±5% |
| Communication | CAN FD / CAN |
| Response time | 45 μs |
| Input encoder resolution | 14 bit |
| Output encoder resolution | 14 bit |
| Bus bit rate | 5 Mbps |
| Control frequency | 5 kHz |
| **Motor** | |
| Torque constant | 0.54 N·m/A |
| Pole pairs | 14 |
| **Gearbox** | |
| Backlash | <10 arcmin |
| Positioning repeatability | <12 arcmin |
| Absolute positioning accuracy | <15 arcmin |

Exact configuration and volume pricing on request.

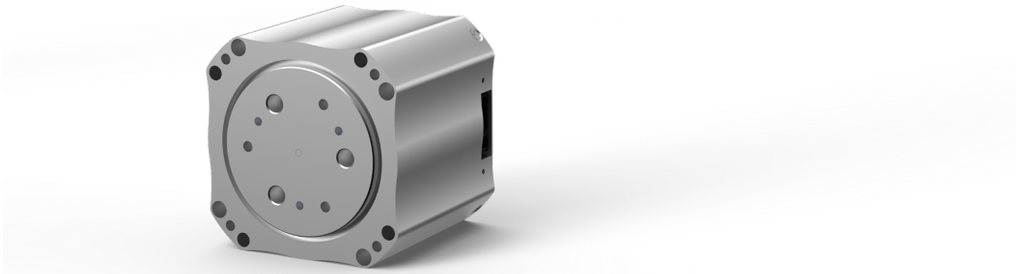

## Torque-speed performance curve

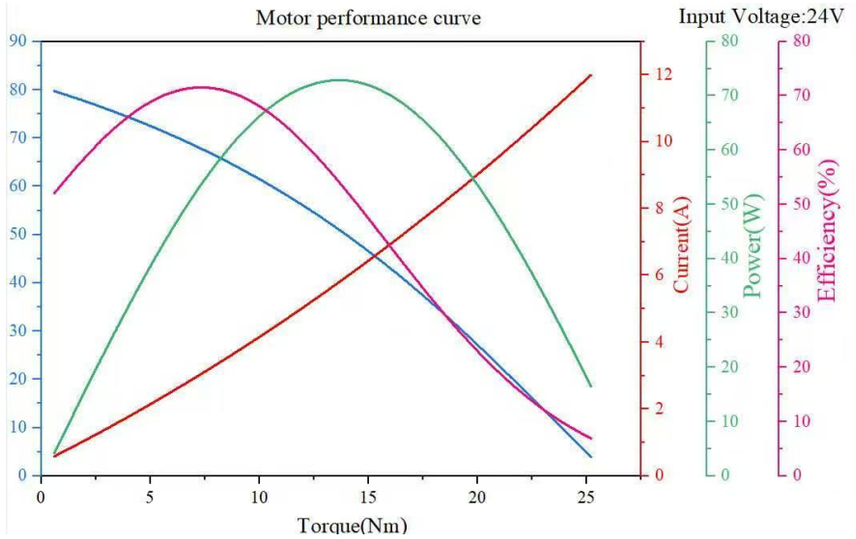


## Installation dimensions

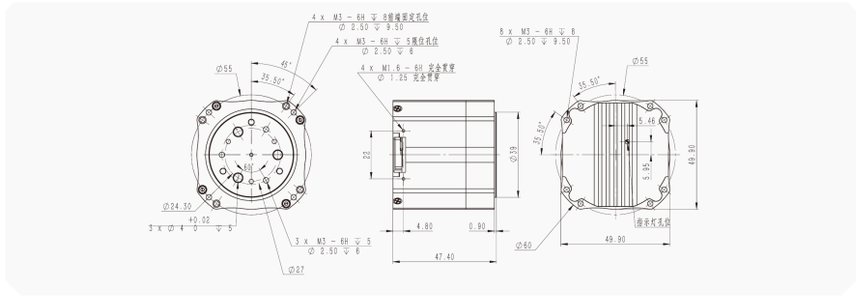

Original engineering graphic. Translated callouts: p. 22.

# XTR-J106

Planetary joint module / Crossed-roller bearing version

| Mechanical | |
|---|---|
| Length / width | 50 mm |
| Height | 52.4 mm |
| Weight | 345 g |
| **Module performance** | |
| Reduction ratio | 36:1 |
| Rated voltage | 24 V |
| Rated current | 2 A |
| Rated torque | 6 N·m |
| Stall torque | 28 N·m |
| Rated speed | 50 rpm |
| No-load speed | 80 rpm |
| Rated output power | 30 W |
| **Electrical & control** | |
| Voltage range | 12-60 V |
| Peak current | 13.3 A |
| Speed control accuracy | ±5% |
| Torque control accuracy | ±5% |
| Communication | CAN FD / CAN |
| Response time | 45 µs |
| Input encoder resolution | 14 bit |
| Output encoder resolution | 14 bit |
| Bus bit rate | 5 Mbps |
| Control frequency | 5 kHz |
| **Motor** | |
| Torque constant | 0.54 N·m/A |
| Pole pairs | 14 |
| **Gearbox** | |
| Backlash | <10 arcmin |
| Positioning repeatability | <12 arcmin |
| Absolute positioning accuracy | <15 arcmin |

Exact configuration and volume pricing on request.

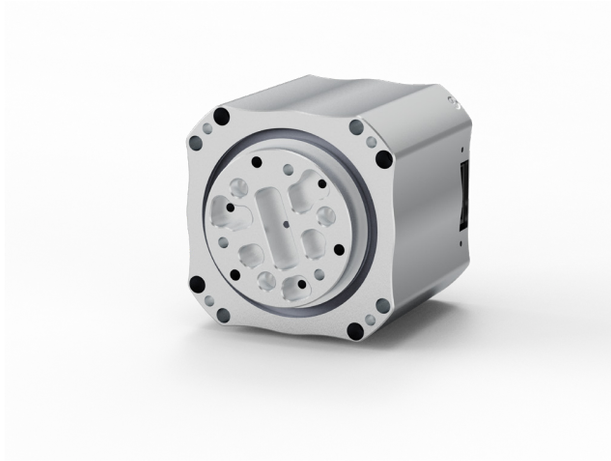

## Torque-speed performance curve

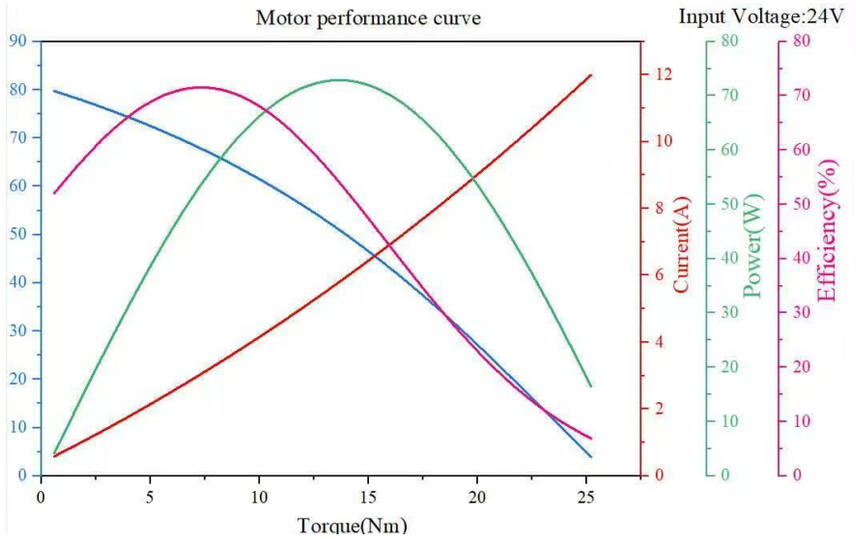


## Installation dimensions

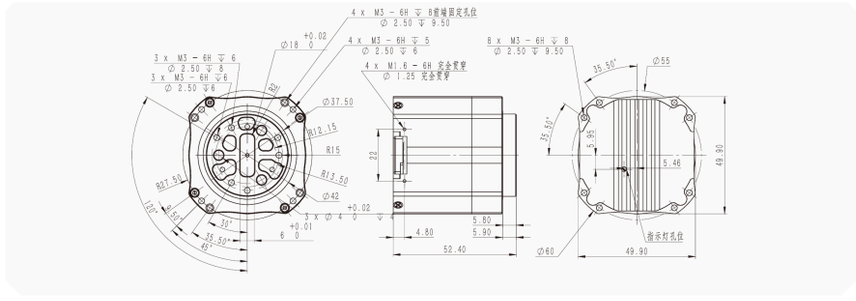

Original engineering graphic. Translated callouts: p. 22.

# XTR-J107

Planetary joint module

| Mechanical | |
|---|---|
| Length / width | 60 mm |
| Height | 56 mm |
| Weight | 565 g |
| **Module performance** | |
| Reduction ratio | 36:1 |
| Rated voltage | 24 V |
| Rated current | 3.5 A |
| Rated torque | 10 N·m |
| Stall torque | 48 N·m |
| Rated speed | 60 rpm |
| No-load speed | 80 rpm |
| Rated output power | 52 W |
| **Electrical & control** | |
| Voltage range | 12-60 V |
| Peak current | 23 A |
| Speed control accuracy | ±5% |
| Torque control accuracy | ±5% |
| Communication | CAN FD / CAN |
| Response time | 45 μs |
| Input encoder resolution | 14 bit |
| Output encoder resolution | 14 bit |
| Bus bit rate | 5 Mbps |
| Control frequency | 5 kHz |
| **Motor** | |
| Torque constant | 0.531 N·m/A |
| Pole pairs | 14 |
| **Gearbox** | |
| Backlash | <10 arcmin |
| Positioning repeatability | <12 arcmin |
| Absolute positioning accuracy | <15 arcmin |

Exact configuration and volume pricing on request.

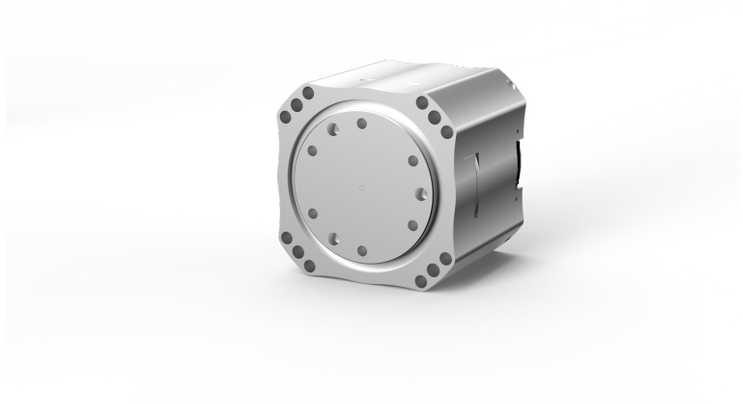

## Torque-speed performance curve

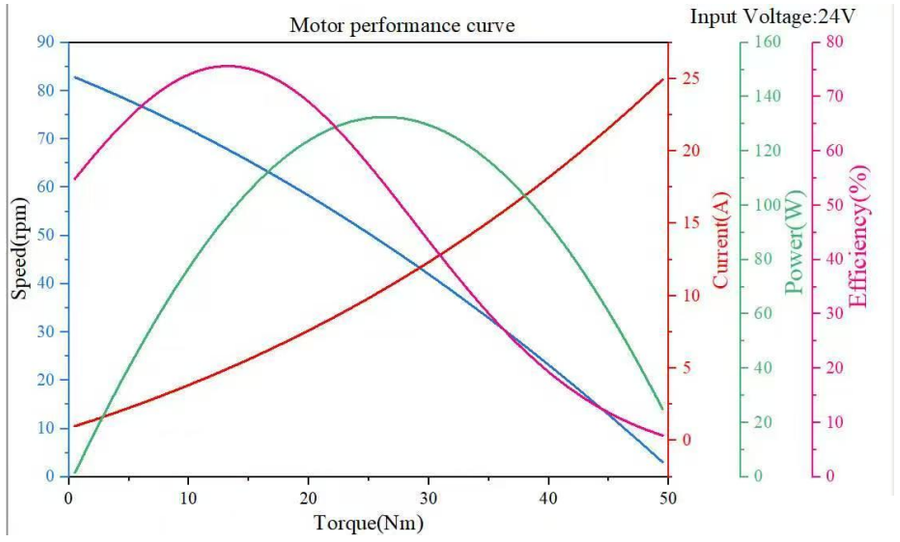


## Installation dimensions

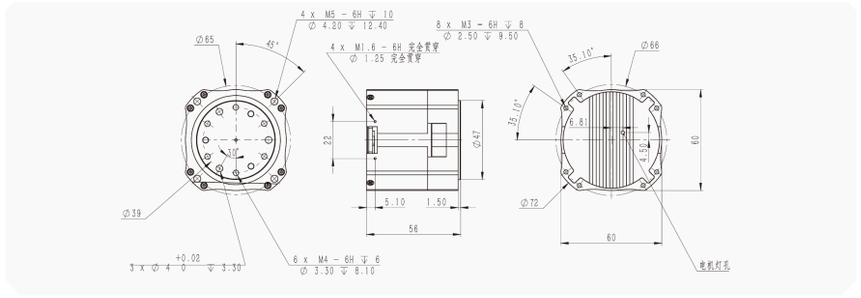

Original engineering graphic. Translated callouts: p. 22.

# XTR-J108

Planetary joint module / Crossed-roller bearing version

| | |
|---|---|
| **Mechanical** | |
| Length / width | 60 mm |
| Height | 56 mm |
| Weight | 570 g |
| **Module performance** | |
| Reduction ratio | 36:1 |
| Rated voltage | 24 V |
| Rated current | 3.5 A |
| Rated torque | 10 N·m |
| Stall torque | 48 N·m |
| Rated speed | 60 rpm |
| No-load speed | 80 rpm |
| Rated output power | 52 W |
| **Electrical & control** | |
| Voltage range | 12-60 V |
| Peak current | 23 A |
| Speed control accuracy | ±5% |
| Torque control accuracy | ±5% |
| Communication | CAN FD / CAN |
| Response time | 45 μs |
| Input encoder resolution | 14 bit |
| Output encoder resolution | 14 bit |
| Bus bit rate | 5 Mbps |
| Control frequency | 5 kHz |
| **Motor** | |
| Torque constant | 0.531 N·m/A |
| Pole pairs | 14 |
| **Gearbox** | |
| Backlash | <10 arcmin |
| Positioning repeatability | <12 arcmin |
| Absolute positioning accuracy | <15 arcmin |

Exact configuration and volume pricing on request.

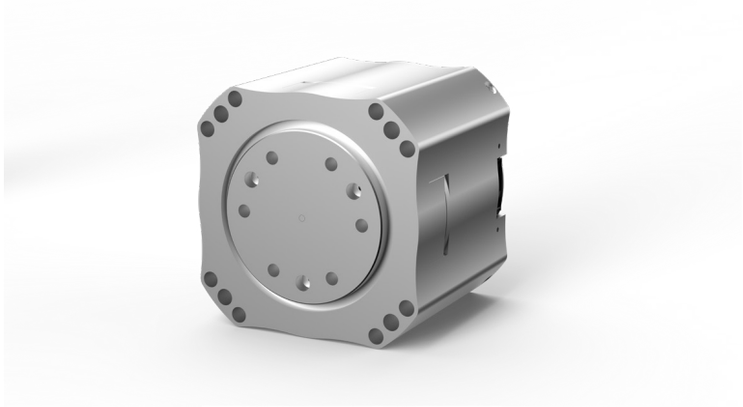

## Torque-speed performance curve

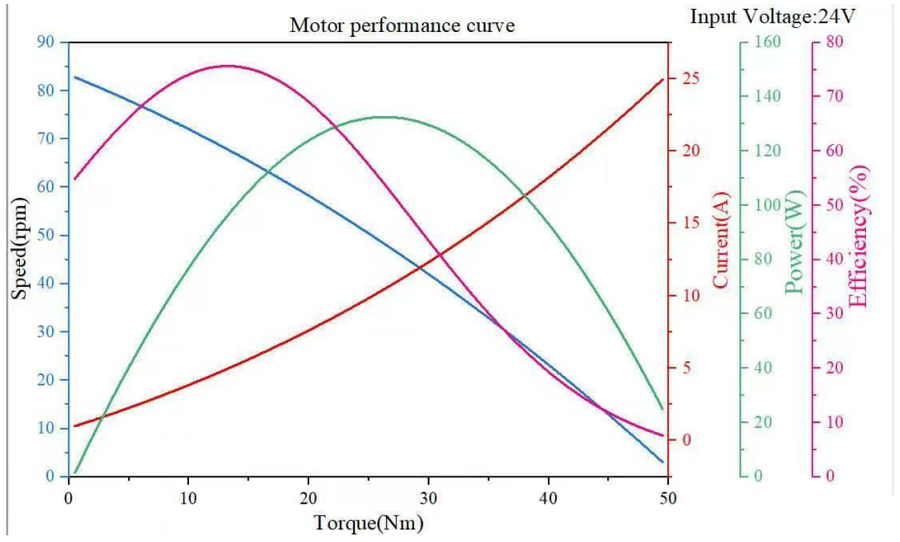


## Installation dimensions

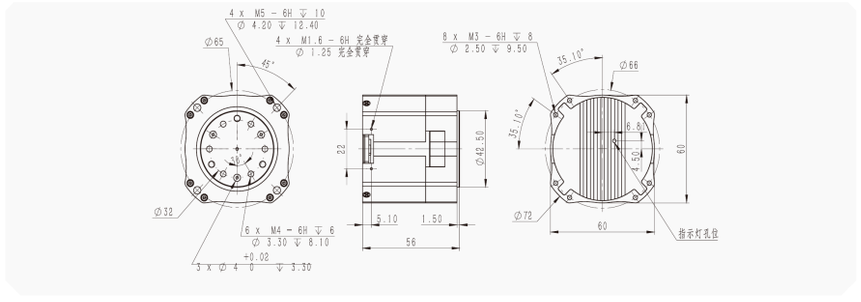

Original engineering graphic. Translated callouts: p. 22.

# XTR-J109

Planetary joint module

| Mechanical | |
|---|---|
| Length / width | 75 mm |
| Height | 35 mm |
| Weight | 390 g |

| Module performance | |
|---|---|
| Reduction ratio | 7:1 |
| Rated voltage | 24 V |
| Rated current | 6 A |
| Rated torque | 3.5 N·m |
| Stall torque | 15 N·m |
| Rated speed | 250 rpm |
| No-load speed | 275 rpm |
| Rated output power | 92 W |

| Electrical & control | |
|---|---|
| Voltage range | 12-60 V |
| Peak current | 20 A |
| Speed control accuracy | ±5% |
| Torque control accuracy | ±5% |
| Communication | CAN FD / CAN |
| Response time | 45 µs |
| Input encoder resolution | 14 bit |
| Output encoder resolution | 14 bit |
| Bus bit rate | 5 Mbps |
| Control frequency | 5 kHz |

| Motor | |
|---|---|
| Torque constant | 0.602 N·m/A |
| Pole pairs | 14 |

| Gearbox | |
|---|---|
| Backlash | <10 arcmin |
| Positioning repeatability | <12 arcmin |
| Absolute positioning accuracy | <15 arcmin |

Exact configuration and volume pricing on request.

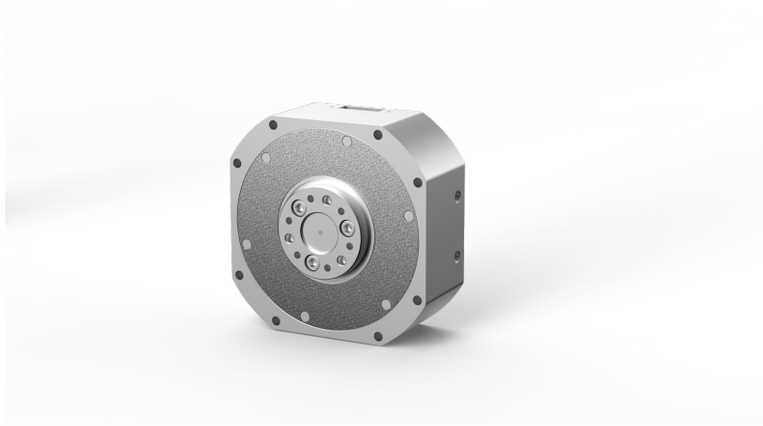

## Torque-speed performance curve

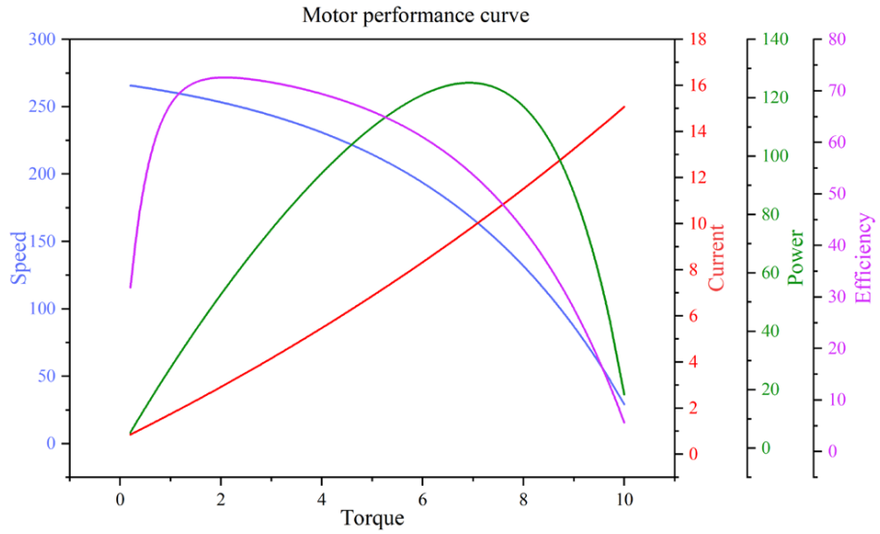


## Installation dimensions

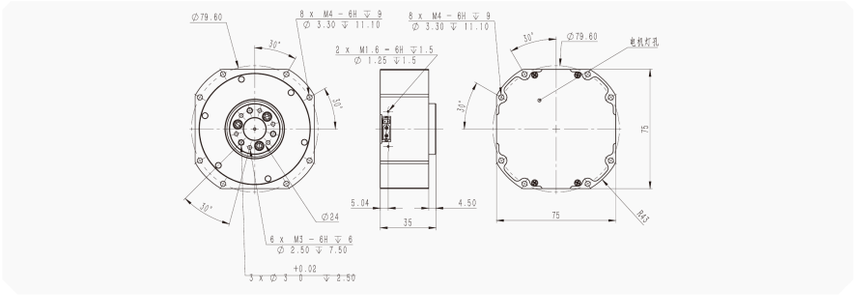

Original engineering graphic. Translated callouts: p. 22.

# XTR-J110

Planetary joint module / Crossed-roller bearing version

| | |
|---|---|
| **Mechanical** | |
| Length / width | 75 mm |
| Height | 56 mm |
| Weight | 850 g |
| **Module performance** | |
| Reduction ratio | 35:1 |
| Rated voltage | 24 V |
| Rated current | 5.5 A |
| Rated torque | 20 N·m |
| Stall torque | 76 N·m |
| Rated speed | 45 rpm |
| No-load speed | 55 rpm |
| Rated output power | 94 W |
| **Electrical & control** | |
| Voltage range | 12-60 V |
| Peak current | 28 A |
| Speed control accuracy | ±5% |
| Torque control accuracy | ±5% |
| Communication | CAN FD / CAN |
| Response time | 45 μs |
| Input encoder resolution | 14 bit |
| Output encoder resolution | 14 bit |
| Bus bit rate | 5 Mbps |
| Control frequency | 5 kHz |
| **Motor** | |
| Torque constant | 0.602 N·m/A |
| Pole pairs | 14 |
| **Gearbox** | |
| Backlash | <10 arcmin |
| Positioning repeatability | <12 arcmin |
| Absolute positioning accuracy | <15 arcmin |

Exact configuration and volume pricing on request.

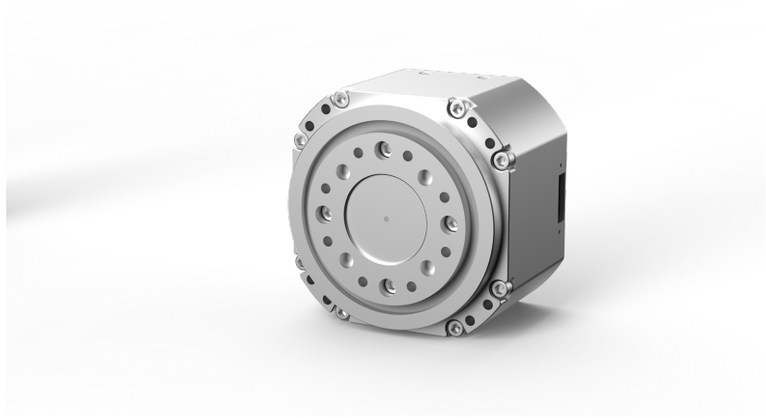

## Torque-speed performance curve

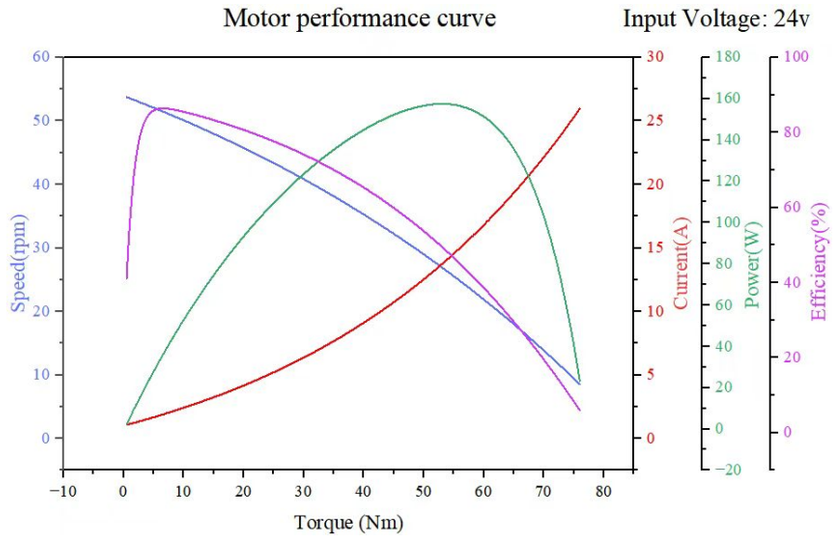


## Installation dimensions

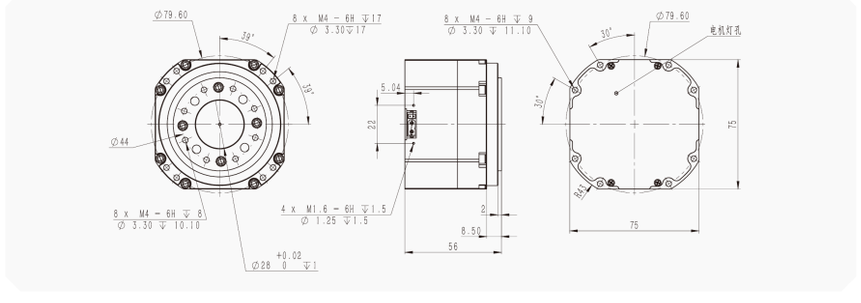

Original engineering graphic. Translated callouts: p. 22.

# XTR-J111

Ultra-thin joint module

| Mechanical | |
|---|---|
| Length / width | 115 × 61.9 mm |
| Height | 37 mm |
| Weight | 558 g |
| **Module performance** | |
| Reduction ratio | 35:1 |
| Rated voltage | 24 V |
| Rated current | 3 A |
| Rated torque | 10 N·m |
| Stall torque | 36 N·m |
| Rated speed | 50 rpm |
| No-load speed | 60 rpm |
| Rated output power | 52 W |
| **Electrical & control** | |
| Voltage range | 12-50.4 V |
| Peak current | 15 A |
| Speed control accuracy | ±5% |
| Torque control accuracy | ±5% |
| Communication | CAN FD / CAN |
| Response time | 140 μs |
| Input encoder resolution | 14 bit |
| Output encoder resolution | 14 bit |
| Bus bit rate | 5 Mbps |
| Control frequency | 5 kHz |
| **Motor** | |
| Torque constant | 0.531 N·m/A |
| Pole pairs | 14 |
| **Gearbox** | |
| Backlash | <10 arcmin |
| Positioning repeatability | <12 arcmin |
| Absolute positioning accuracy | <15 arcmin |

Exact configuration and volume pricing on request.



## Torque-speed performance curve

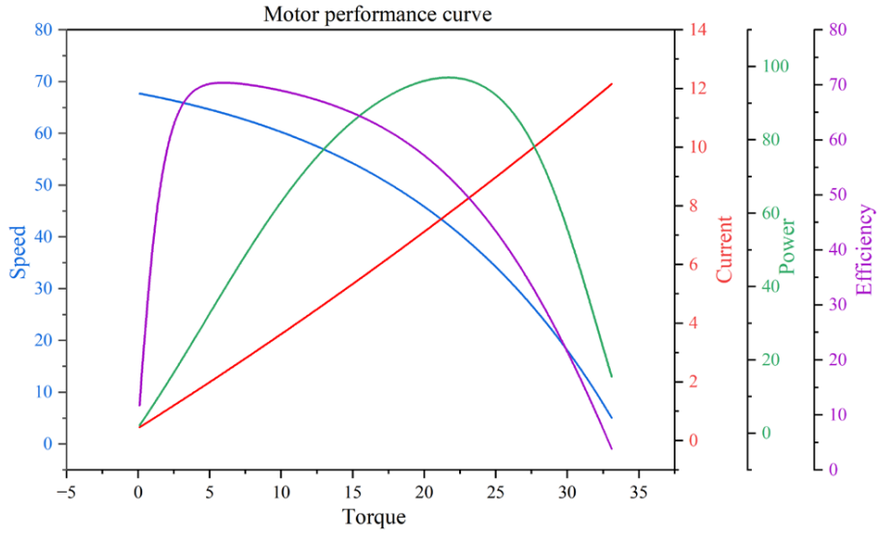


## Installation dimensions

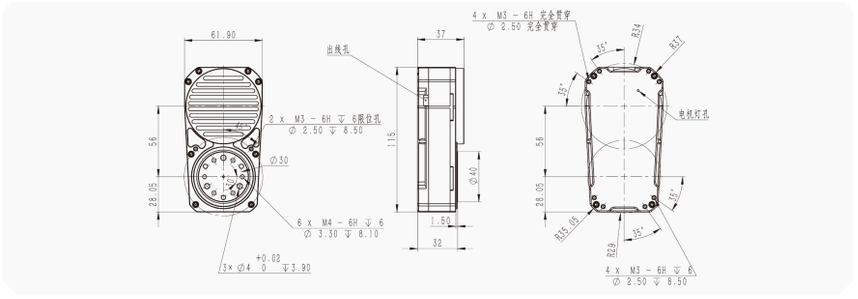

Original engineering graphic. Translated callouts: p. 22.

# XTR-J112

Ultra-thin joint module

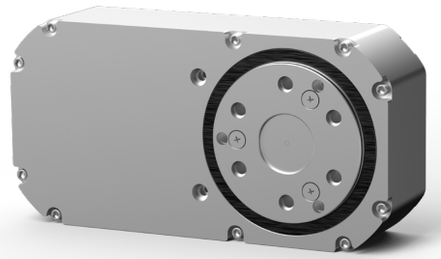

| Mechanical | |
|---|---|
| Length / width | 140.5 × 71.5 mm |
| Height | 36.9 mm |
| Weight | 808 g |
| **Module performance** | |
| Reduction ratio | 33:1 |
| Rated voltage | 24 V |
| Rated current | 4.8 A |
| Rated torque | 20 N·m |
| Stall torque | 50 N·m |
| Rated speed | 40 rpm |
| No-load speed | 48 rpm |
| Rated output power | 84 W |
| **Electrical & control** | |
| Voltage range | 12-50.4 V |
| Peak current | 20 A |
| Speed control accuracy | ±5% |
| Torque control accuracy | ±5% |
| Communication | CAN FD / CAN |
| Response time | 140 μs |
| Input encoder resolution | 14 bit |
| Output encoder resolution | 14 bit |
| Bus bit rate | 5 Mbps |
| Control frequency | 3 kHz |
| **Motor** | |
| Torque constant | 0.59 N·m/A |
| Pole pairs | 14 |
| **Gearbox** | |
| Backlash | <10 arcmin |
| Positioning repeatability | <12 arcmin |
| Absolute positioning accuracy | <15 arcmin |

Check length: table 140.5 mm; drawing 141.50 mm.

## Torque-speed performance curve

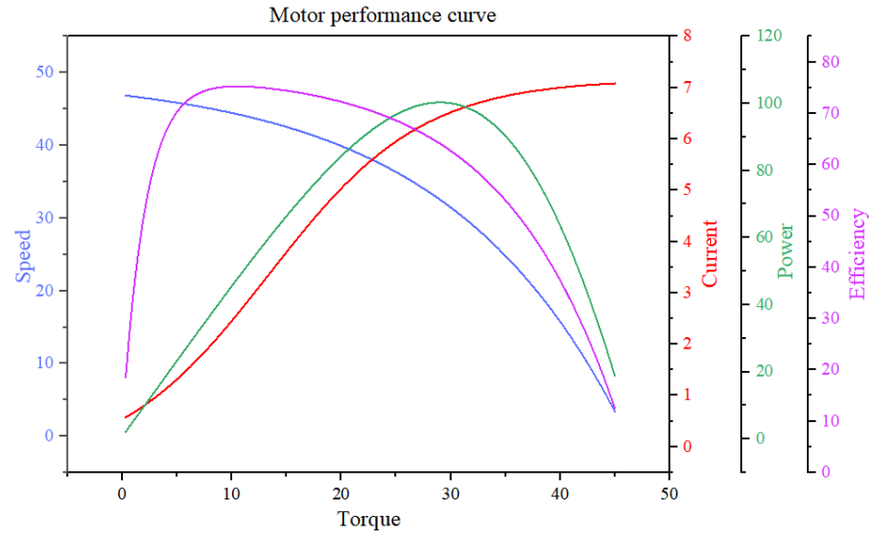


## Installation dimensions

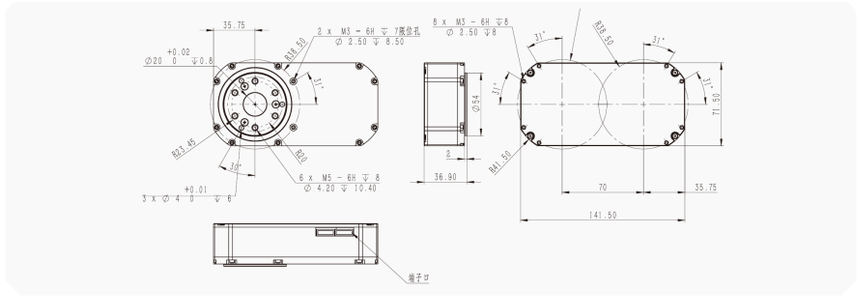

Original engineering graphic. Translated callouts: p. 22.

# XTR-J114

Hollow-bore joint module

| Mechanical | |
|---|---|
| Length / width | 44 mm |
| Height | 44.9 mm |
| Weight | 237 g |
| **Module performance** | |
| Reduction ratio | 31:1 |
| Rated voltage | 24 V |
| Rated current | 0.7 A |
| Rated torque | 2 N·m |
| Stall torque | 10 N·m |
| Rated speed | 40 rpm |
| No-load speed | 160 rpm |
| Rated output power | 8.5 W |
| **Electrical & control** | |
| Voltage range | 12-50.4 V |
| Peak current | 10 A |
| Speed control accuracy | ±5% |
| Torque control accuracy | ±5% |
| Communication | CAN FD / CAN |
| Response time | 140 μs |
| Input encoder resolution | 14 bit |
| Output encoder resolution | 14 bit |
| Bus bit rate | 5 Mbps |
| Control frequency | 3 kHz |
| **Motor** | |
| Torque constant | 0.272 N·m/A |
| Pole pairs | 14 |
| **Gearbox** | |
| Backlash | <10 arcmin |
| Positioning repeatability | <12 arcmin |
| Absolute positioning accuracy | <15 arcmin |

Exact configuration and volume pricing on request.

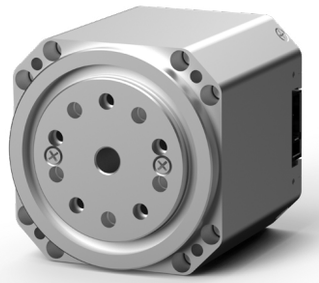

## Torque-speed performance curve

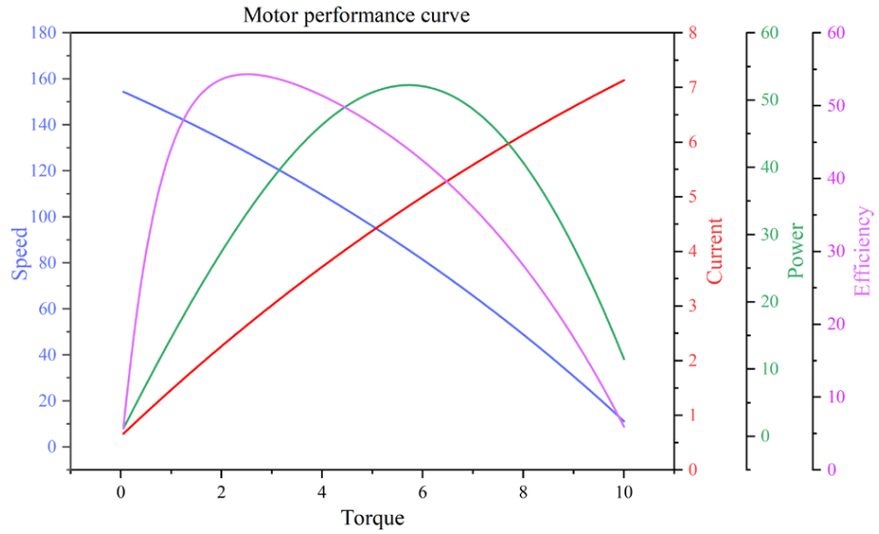


## Installation dimensions

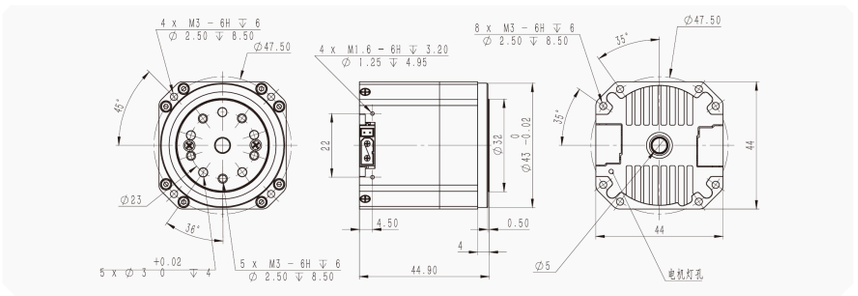


Original engineering graphic. Translated callouts: p. 22.

# XTR-J113

Hollow-bore joint module

| Mechanical | |
|---|---|
| Length / width | 50 mm |
| Height | 53 mm |
| Weight | 385 g |

| Module performance | |
|---|---|
| Reduction ratio | 31:1 |
| Rated voltage | 24 V |
| Rated current | 2 A |
| Rated torque | 4 N·m |
| Stall torque | 16 N·m |
| Rated speed | 50 rpm |
| No-load speed | 103 rpm |
| Rated output power | 21 W |

| Electrical & control | |
|---|---|
| Voltage range | 12-50.4 V |
| Peak current | 10 A |
| Speed control accuracy | ±5% |
| Torque control accuracy | ±5% |
| Communication | CAN FD / CAN |
| Response time | 140 μs |
| Input encoder resolution | 14 bit |
| Output encoder resolution | 14 bit |
| Bus bit rate | 5 Mbps |
| Control frequency | 3 kHz |

| Motor | |
|---|---|
| Torque constant | 0.54 N·m/A |
| Pole pairs | 14 |

| Gearbox | |
|---|---|
| Backlash | <10 arcmin |
| Positioning repeatability | <12 arcmin |
| Absolute positioning accuracy | <15 arcmin |

Exact configuration and volume pricing on request.

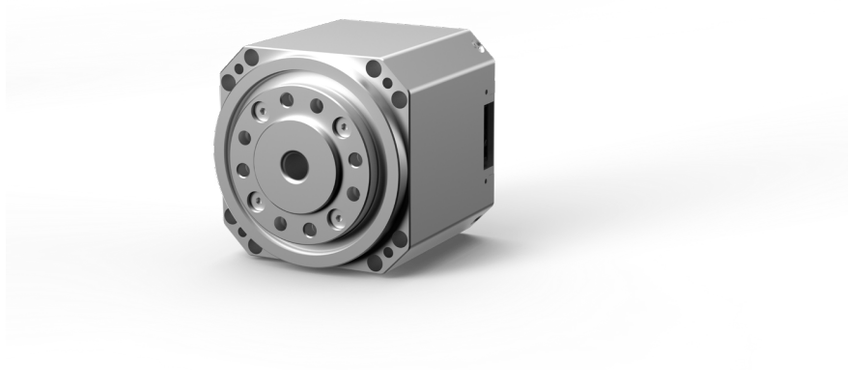

## Torque-speed performance curve

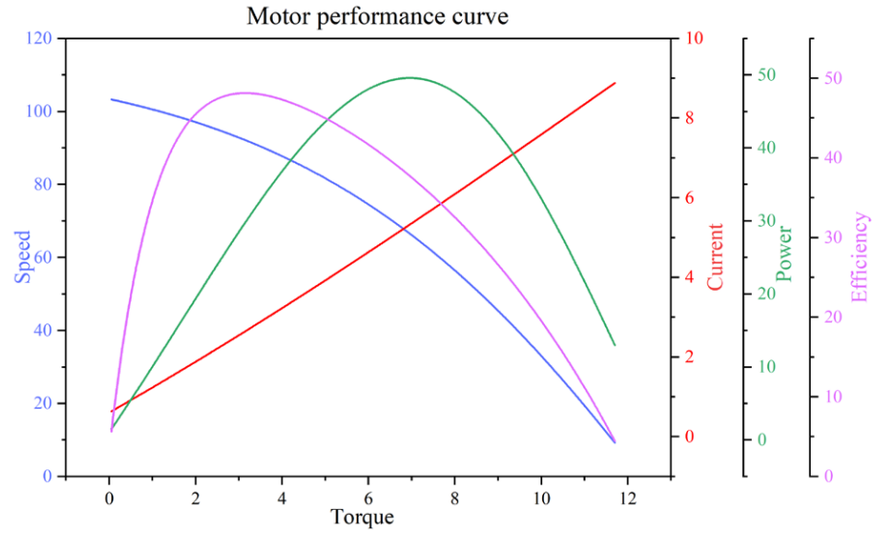


## Installation dimensions

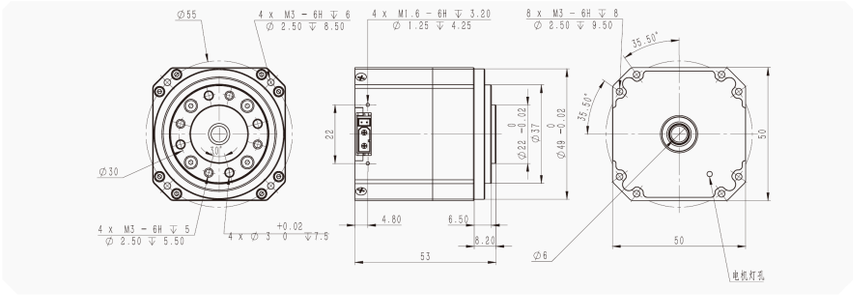

Original engineering graphic. Translated callouts: p. 22.

# XTR-J115

Hollow-bore joint module

| Mechanical | |
|---|---|
| Length / width | 102 mm |
| Height | 64 mm |
| Weight | 1380 g |

| Module performance | |
|---|---|
| Reduction ratio | 20:1 |
| Rated voltage | 48 V |
| Rated current | 13 A |
| Rated torque | 30 N·m |
| Stall torque | 100 N·m |
| Rated speed | 161 rpm |
| No-load speed | 182 rpm |
| Rated output power | 505 W |

| Electrical & control | |
|---|---|
| Voltage range | 12-60 V |
| Peak current | 40 A |
| Speed control accuracy | ±5% |
| Torque control accuracy | ±5% |
| Communication | CAN FD / CAN |
| Response time | 140 μs |
| Input encoder resolution | 14 bit |
| Output encoder resolution | 14 bit |
| Bus bit rate | 5 Mbps |
| Control frequency | 5 kHz |

| Motor | |
|---|---|
| Torque constant | 2.308 N·m/A |
| Pole pairs | 21 |

| Gearbox | |
|---|---|
| Backlash | <10 arcmin |
| Positioning repeatability | <12 arcmin |
| Absolute positioning accuracy | <15 arcmin |

Exact configuration and volume pricing on request.

**NEW IN THIS EDITION**



## Torque-speed performance curve

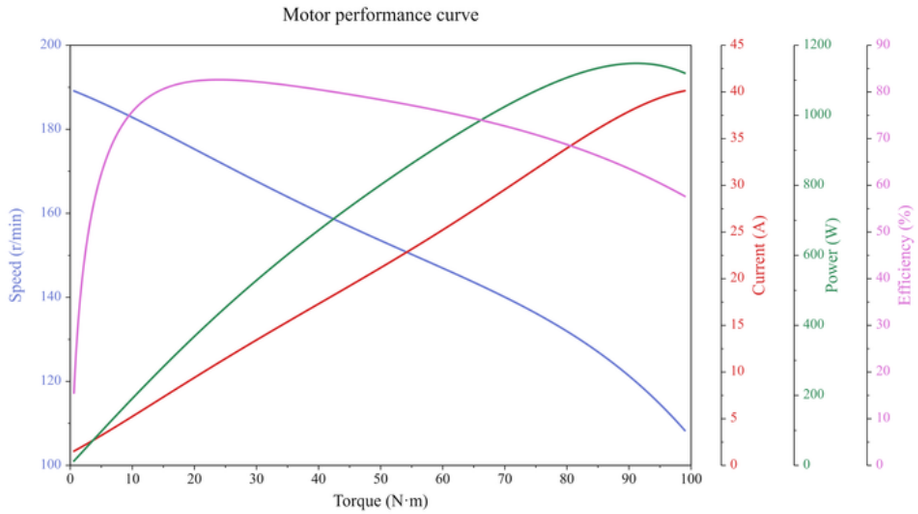


## Installation dimensions

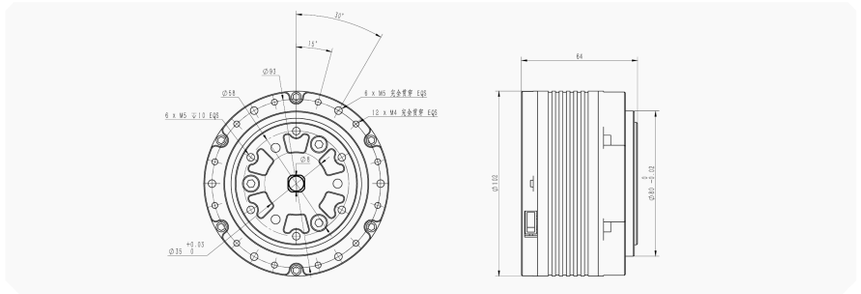

Original engineering graphic. Translated callouts: p. 22.

# XTR-J116

Hollow-bore joint module

| Mechanical | |
|---|---|
| Length / width | 116 mm |
| Height | 63.2 mm |
| Weight | 1850 g |
| **Module performance** | |
| Reduction ratio | 23:1 |
| Rated voltage | 48 V |
| Rated current | 6.7 A |
| Rated torque | 45 N·m |
| Stall torque | 190 N·m |
| Rated speed | 45 rpm |
| No-load speed | 145 rpm |
| Rated output power | 212 W |
| **Electrical & control** | |
| Voltage range | 12-60 V |
| Peak current | 60 A |
| Speed control accuracy | ±5% |
| Torque control accuracy | ±5% |
| Communication | CAN FD / CAN |
| Response time | 140 μs |
| Input encoder resolution | 14 bit |
| Output encoder resolution | 14 bit |
| Bus bit rate | 5 Mbps |
| Control frequency | 5 kHz |
| **Motor** | |
| Torque constant | 6.716 N·m/A |
| Pole pairs | 21 |
| **Gearbox** | |
| Backlash | <10 arcmin |
| Positioning repeatability | <12 arcmin |
| Absolute positioning accuracy | <10 arcmin |

Confirm curve test conditions and final installation height.

NEW IN THIS EDITION



## Torque-speed performance curve

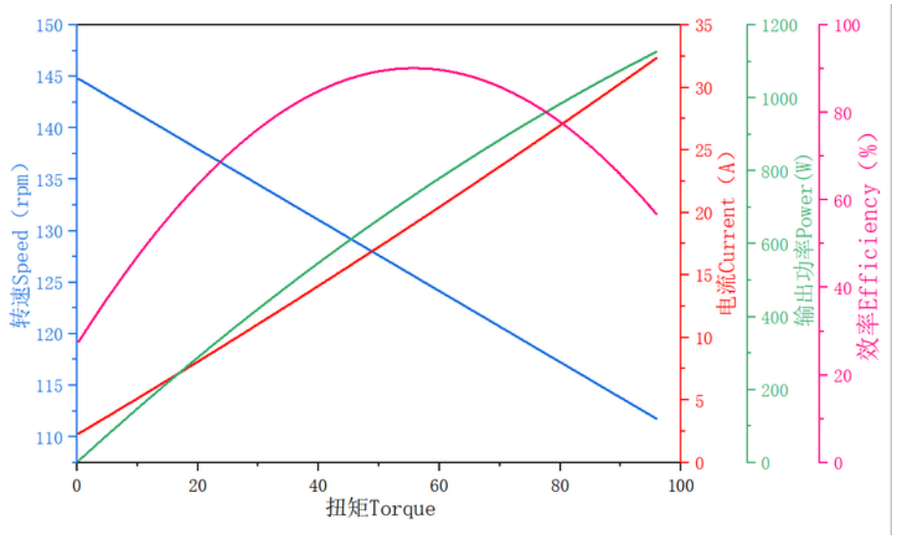


## Installation dimensions

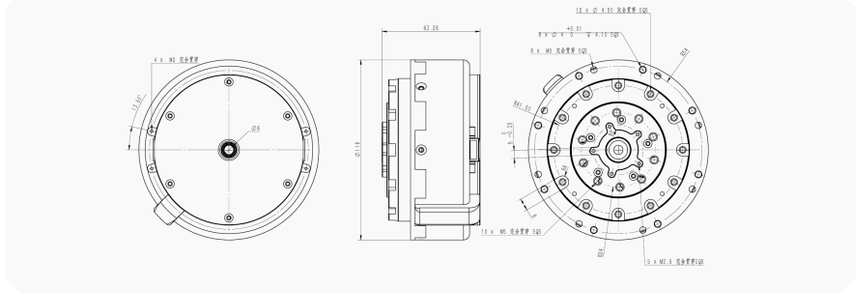

Original engineering graphic. Translated callouts: p. 22.

# XTR-A600

6-axis robotic arm

| Product specifications | |
|---|---|
| Standing dimension | 860 mm |
| Folded dimension | 460 mm |
| Weight | 4.35 kg |
| Operating voltage | 24 V |
| Maximum payload (listed) | 3.5 kg |
| Max. end-effector speed | 0.8 m/s |
| Degrees of freedom | 6 |
| Peak joint torque | 48 N·m |
| Communication | CAN FD |

| Joint motion ranges | |
|---|---|
| Axis 1 | -180° to +180° |
| Axis 2 | 0° to +200° |
| Axis 3 | 0° to +230° |
| Axis 4 | -90° to +90° |
| Axis 5 | -90° to +90° |
| Axis 6 | -180° to +180° |

## Joint module types listed

XTR-J107 / XTR-J106 / XTR-J105 / XTR-J102 / XTR-J101



## Included hardware & software

Single-DOF gripper; high-performance low-level controller; low-level control SDK; open-source motion-control algorithms.

## Installation dimensions

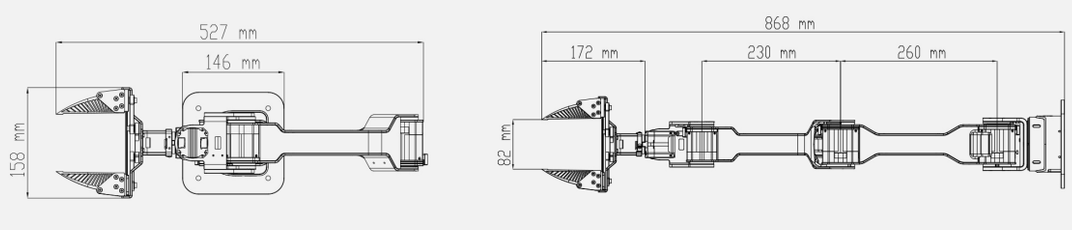


Standing dimension: 860 mm. Drawing overall length: 868 mm. Confirm the measurement reference.

# XTR-A610

Compact 6-axis robotic arm

| Product specifications | |
|---|---|
| Standing dimension | 641 mm |
| Folded dimension | 410 mm |
| Weight | 3.0 kg |
| Operating voltage | 24 V |
| Maximum payload (listed) | 2.85 kg |
| Max. end-effector speed | 0.8 m/s |
| Degrees of freedom | 6 |
| Peak joint torque | 28 N·m |
| Communication | CAN FD |

| Joint motion ranges | |
|---|---|
| Axis 1 | -150° to +150° |
| Axis 2 | 0° to +200° |
| Axis 3 | 0° to +240° |
| Axis 4 | -120° to +100° |
| Axis 5 | -90° to +90° |
| Axis 6 | -160° to +160° |

## Joint module types listed

XTR-J105 / XTR-J102 / XTR-J101

**NEW IN THIS EDITION**

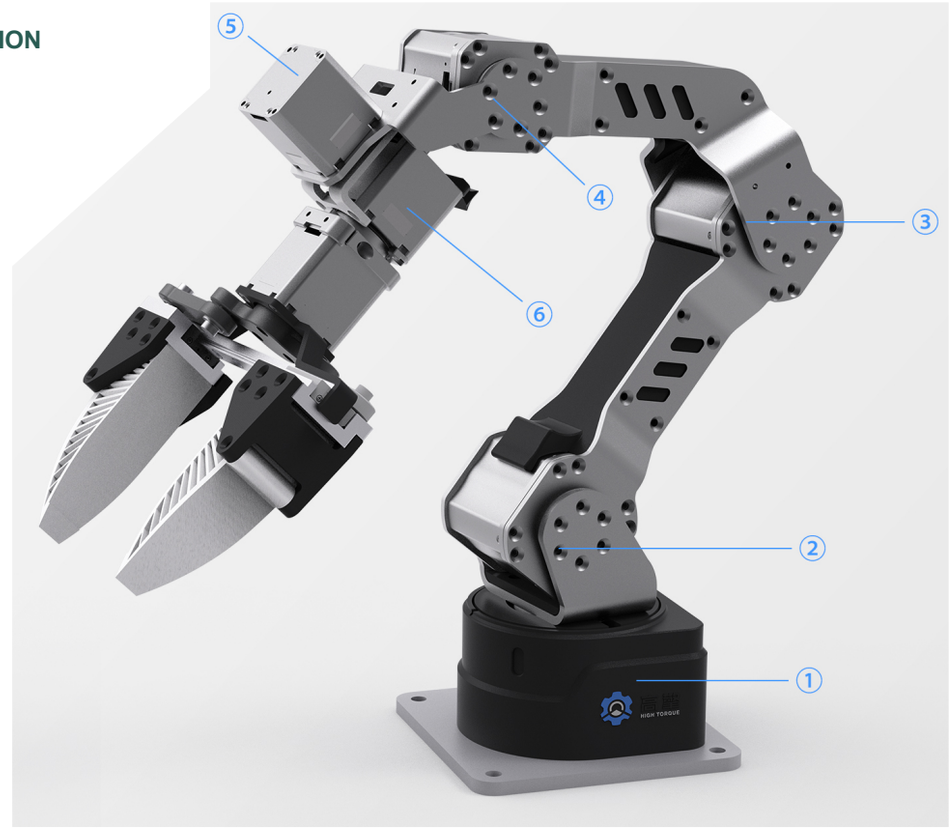


## Included hardware & software

Single-DOF gripper; high-performance low-level controller; low-level control SDK; open-source motion-control algorithms.

## Installation dimensions

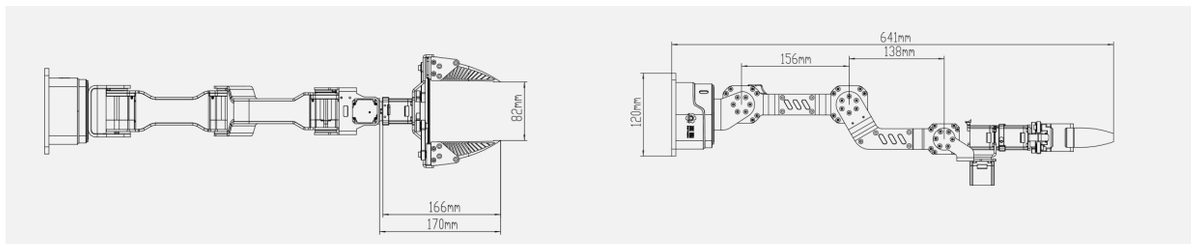


2.85 kg is the listed static limit payload; dynamic payload must be confirmed.

# XTR-A800

Dual-arm platform | 7 DOF + gripper per arm

NEW IN THIS EDITION

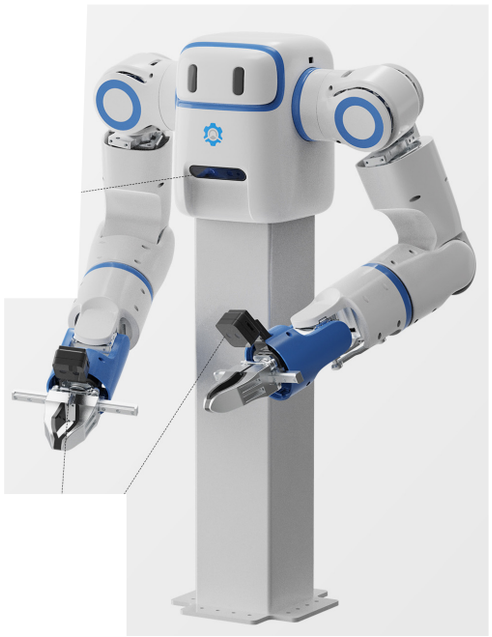

| Product specifications | |
|---|---|
| Overall height | 774 mm |
| Arm hanging dimension at zero | 689 mm |
| Single-arm working radius | 758 mm |
| Dual-arm span | 1,596 mm |
| Weight per arm | 7 kg |
| Operating voltage | 24 / 48 V |
| Maximum payload (listed) | 10 kg |
| Max. end-effector speed | 3.6 m/s |
| Peak joint torque | 76 N·m |
| Communication | CAN / CAN FD |
| Positioning repeatability | ±0.5 mm |
| Noise level | <60 dB |
| Supported systems | ROS 1 / ROS 2 |
| **Per-arm DOF: 7 + gripper** | |
| **Joint motion ranges** | |
| Axis 1 | P: -95° to +185° |
| Axis 2 | R: -16° to +196° |
| Axis 3 | Y: ±90° |
| Axis 4 | P: -60° to +130° |
| Axis 5 | Y: ±78° |
| Axis 6 | R: ±45° |
| Axis 7 | P: -90° to +105° |

Listed maximum payload: 10 kg. Load conditions and whether this value applies per arm must be confirmed.

### Joint numbering

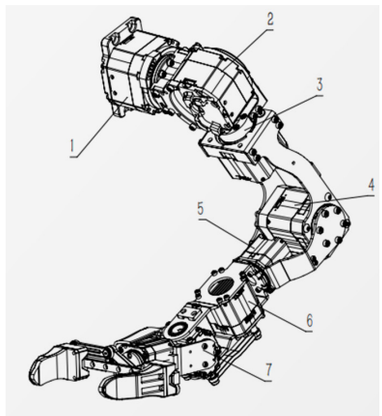


### XTR-A800 / XTR-A800-P

| Configuration | XTR-A800 | XTR-A800-P |
|---|---|---|
| Controller | Standard controller | NVIDIA Orin NX 16GB |
| Body camera | None | D435i × 1 |
| Wrist cameras | None | D405 × 2 |

### Joint module types listed

XTR-J110 / XTR-J108 / XTR-J107 / XTR-J105 / XTR-J106 / XTR-J102

### Installation dimensions

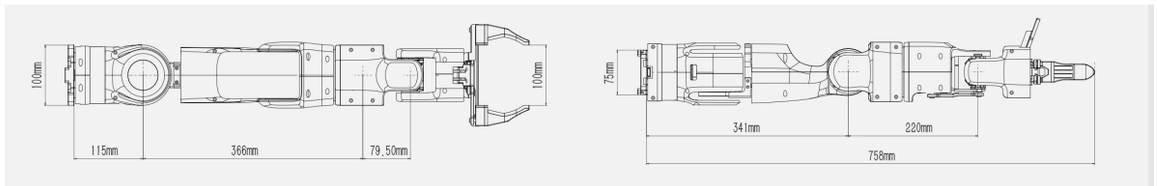

# Engineering notes & drawing glossary

01 Rated and stall torque are separate limits. A stall or peak value is not a continuous-load rating. Confirm duty cycle, cooling and current limits for the application.

02 Dimensions and curves are reproduced from the source revision. Original drawing callouts are retained to preserve technical geometry; translations are provided below. Do not measure dimensions from a printed image.

03 XTR-J112: table length is 140.5 mm, while the drawing shows 141.50 mm. XTR-J116: table height is 63.2 mm; drawing shows 63.26 mm. Confirm controlled drawings before integration.

04 XTR-J115 / J116: confirm curve voltage, load and measurement conditions. The XTR-J116 plot shown in the source covers a different speed/torque range from the full tabulated limits.

05 Module torque constants and response-time values are reproduced as supplied. Confirm definitions and test setup. CAN / CAN FD compatibility, SDK delivery and integration scope should be agreed for the ordered configuration.

| Original callout / symbol | Translation |
|---|---|
| 完全贯穿 | Through / through all |
| 指示灯孔位 / 电机灯孔 | Indicator-light opening |
| 出线孔 / 端子口 / 端子 | Cable outlet / connector port / connector |
| 固定孔位 / 限位孔 | Mounting-hole location / limit hole |
| Speed / Torque / Current / Power / Efficiency | Speed / Torque / Current / Power / Efficiency |
| P / R / Y | Pitch / Roll / Yaw |

## Contact Jennie

jennie@xtivor-robot.com | WhatsApp +852 52249082

**Contact us for a quotation**